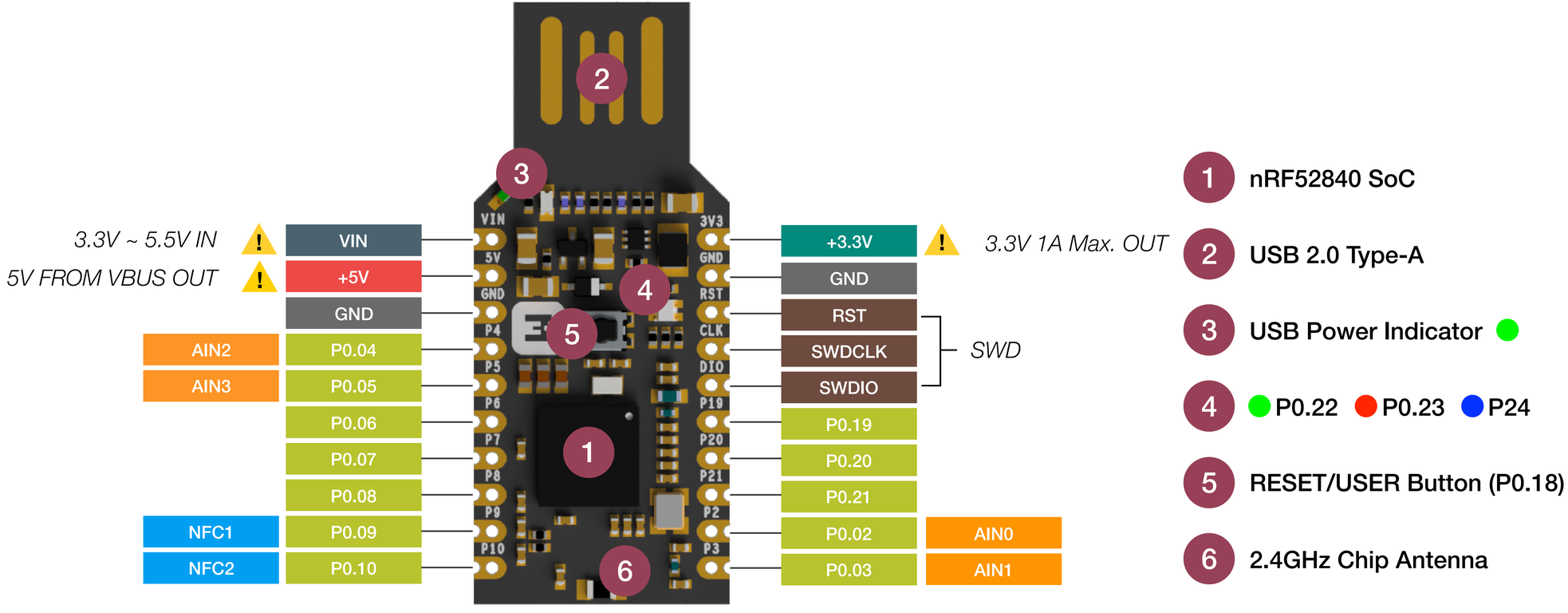
3.3V ~ 5.5V IN
5V FROM VBUS OUT
VIN
+5V
GND
AIN2
P0.04
AIN3
P0.05
P0.06
P0.07
P0.08
NFC1
P0.09
NFC2
P0.10
VIN
5V
GND
P4
P5
P6
P7
P8
P9
P10
3V3
GND
RST
CLK
DIO
P19
P20
P21
P2
P3
+3.3V
3.3V 1A Max. OUT
GND
RST
SWDCLK
SWDIO
SWD
P0.19
P0.20
P0.21
P0.02
AIN0
P0.03
AIN1
1 nRF52840 SoC
2 USB 2.0 Type-A
3 USB Power Indicator
4 P0.22 P0.23 P24
5 RESET/USER Button (P0.18)
6 2.4GHz Chip Antenna